Metrologic®
We really work for you.™

MS7320 InVista®

InVista® offers an outstanding combination of features, versatility, performance, and durability. This fixed mount laser bar code scanner provides ease of use and high throughput speeds by featuring a large, dynamic, and aggressive scan volume.

InVista scanners are sure to provide a positive influence on the productivity of checkout operations by minimizing operator effort and increasing check out speed.

Each InVista is shipped with an integrated EAS deactivation antenna that provides simultaneous scanning and deactivation of security tags, which are used to reduce shrink in retail applications. With a field-replaceable outer window, damaged windows can now be changed easily, eliminating the need to send the entire unit back for repair. The small footprint takes up minimal counter space while maximizing flexibility with the use of the multi-positioning stand. The setup and integration are simplified by using bar code menus or Windows® based software. Supporting multiple interfaces, InVista is compatible with almost every POS system currently on the market. The RS232 auxiliary port allows for hand held scanners or other peripherals to be connected quickly and easily.

With all of the outstanding features, end-users are ensured this scanner will meet the present and future needs of the scanning environments for which it is designed - grocery stores, convenience stores, supermarkets, pharmacies, and specialty stores.

www.metrologic.com

FEATURES	BENEFITS
• Firmware updates via Flash ROM	Update firmware from any PC via MetroSet2® software provided free
• Electronic article surveillance built in	Reduces shrink
• Field replaceable window	Fast repairs without removing unit from service
• Auxiliary port	Connect an external scanner or other peripheral directly to the scanner
• User-replaceable cables	Uses the same user-replaceable cables and power supply as Orbit® and Cubit®

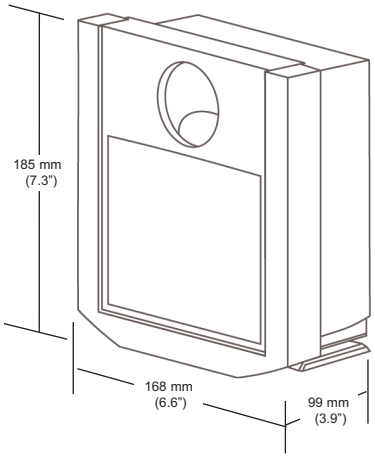

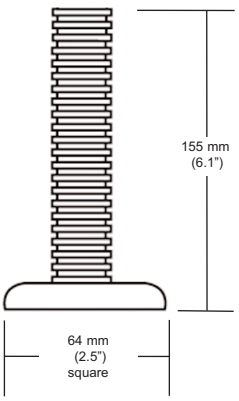

Port Configuration

7320-13	AUX	EAS	RS232/ IBM	OCIA
7320-37	AUX	EAS	RS232/ LIGHT PEN	KB WEDGE/ USB

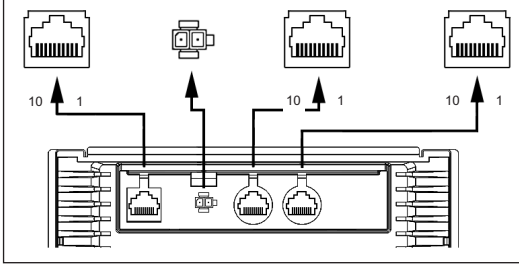

OPERATIONAL

Light Source	Visible Laser Diode 650 nm ± 10 nm
Laser Power	0.678 mW (peak)
Decode Capability	Autodiscriminates all standard bar codes, including RSS; for other symbologies call Metrologic
System Interfaces	PC Keyboard Wedge, RS232, OCIA, Light Pen Emulation, IBM 468x/469x, Stand Alone PC Keyboard, USB (low speed and full speed)
Number Characters Read	Up to 80 data characters
Beeper Operation	7 tones or no beep
Indicators (LED)	Green = laser on, ready to scan Red = good read, decoding

MECHANICAL

Dimensions (without stand)	185 mm H x 99 mm D x 168 mm W (7.3" H x 3.9" D x 6.6" W)
Footprint of Stand	64 mm x 64 mm (2.5" x 2.5")
Weight	1.2 kg (2.65 lbs)
Termination	Three 10-pin modular RJ45
Cable	Standard 2.1 m (7') straight; for other cables call Metrologic
Mount (optional)	Fully adjustable

ELECTRICAL

Input Voltage	5.2 VDC ± 0.25 V
Power	1.9 W
Operating Current	360 mA
DC Transformers	Class II; 5.2 VDC @ 1 A
Laser Class	CDRH: Class IIa; EN60825-1:1994/A11:1996 Class 1
EMC	FCC, ICES-003 & EN55022 Class A

ENVIRONMENTAL

Operating Temperature	0°C to 40°C (32°F to 104°F)
Storage Temperature	-40°C to 60°C (-40°F to 140°F)
Humidity	5% to 95% relative humidity, non-condensing
Light Levels	Up to 4842 Lux (450 footcandles)
Contaminants	Sealed to resist airborne particulate contaminants
Ventilation	None required

SCAN PERFORMANCE

Depth of Scan Field	0 mm - 215 mm (0" - 8.5") for 0.33 mm (13 mil) bar code
Width of Scan Field	38 mm (1.5") @ 15 mm (0.6") ; 135 mm (5.3") @ 191 mm (7.5")
Scan Speed	2000 scan lines per second
Scan Pattern	5 fields of 4 parallel lines (omnidirectional)
Number of Scan Lines	20
Minimum Bar Width	0.127 mm (5.0 mil)
Print Contrast	35% minimum reflectance difference
Roll, Pitch, Yaw	360°, 60°, 60°

Scan Area

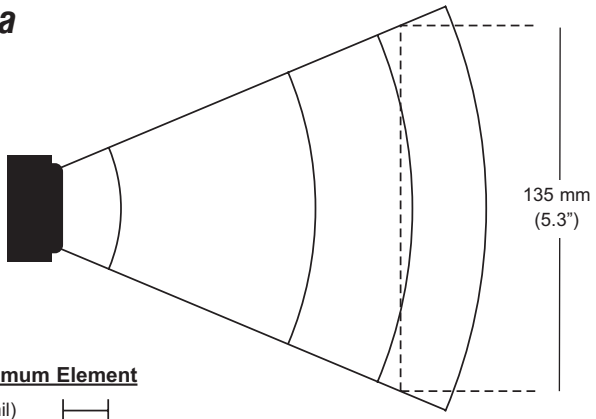

Bar Code Minimum Element

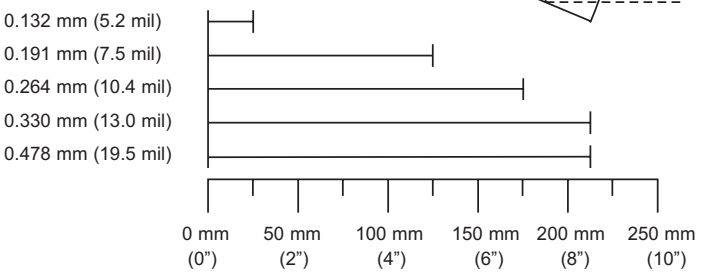

Product Colors Available

Light Grey

MS7320 is available in a variety of other colors with minimum quantity purchase

UNIVERSAL SERIAL BUS

Sunrise 2005 Compliant

Metrologic
We really work for you.™

www.metrologic.com

ISO 9001:2000

Metrologic Instruments, Inc. | **Worldwide Headquarters**
90 Coles Road | Blackwood, NJ 08012-4683 | info@metrologic.com
Telephone 856-228-8100 | Fax 856-228-6673

Asian Headquarters
Tel. 65.6842.7155
info@sg.metrologic.com

European Headquarters
Tel. 49.89.89019.0
info@eu.metrologic.com

The Americas Headquarters
Tel. 1.800.ID.METRO
info@us.metrologic.com

Specifications subject to change without notice.
Printed U.S.A., Copyright August 2005
Metrologic, All rights reserved.

DS7320